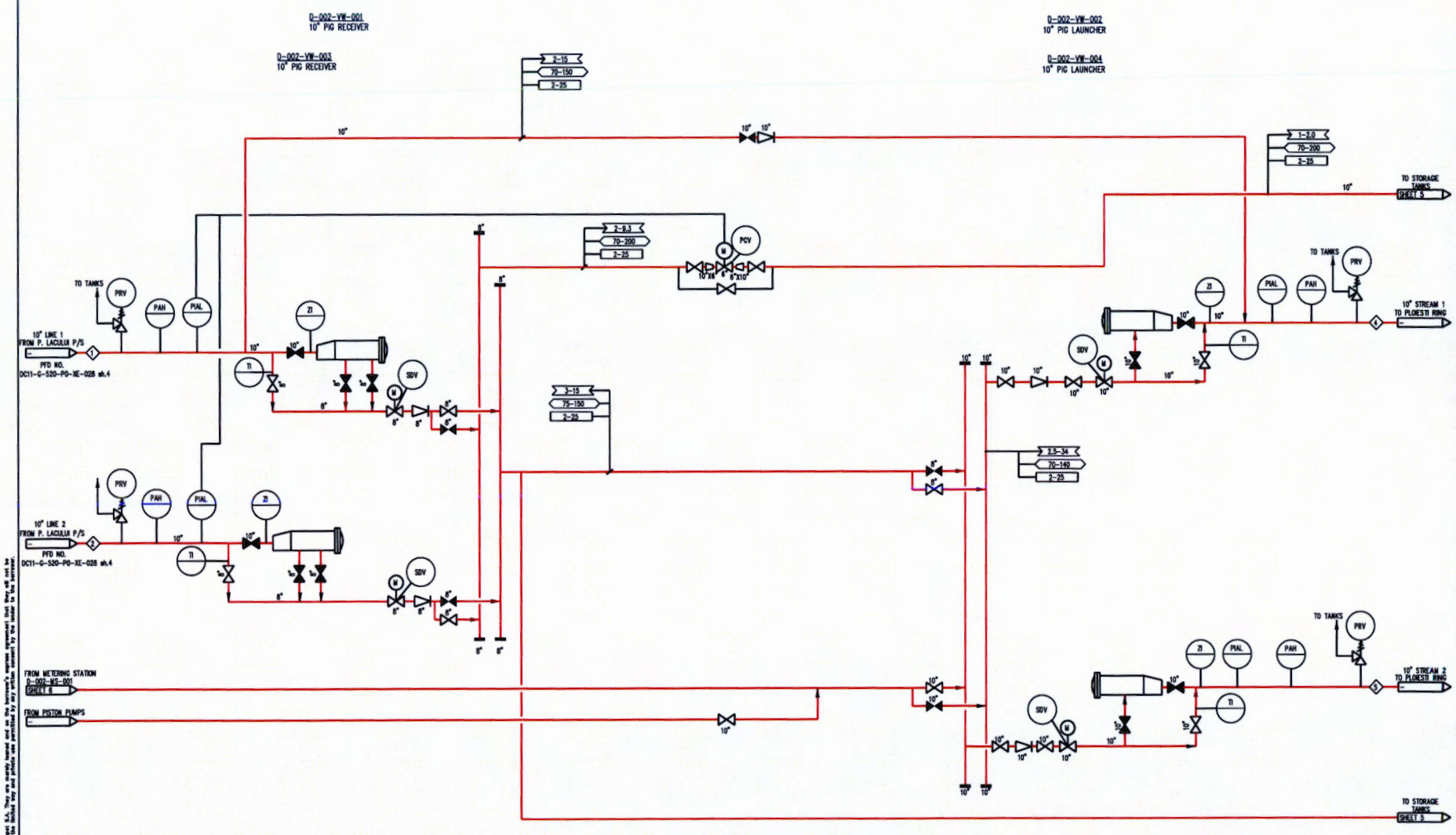

LEGEND

BARG

M3/H

°C

NOTES:

1. FOR LEGEND OF SYMBOLS SEE DWG. NO. DC11-G-520-PO-XF-050 SHEETS 1 AND 2
2. PROPOSED LOCATION FOR BACK PRESSURE CONTROLLER.

Rev. No.	Date	Description	Prep.	Check	Appr.	Appr.
A	15.03.2008	AS BUILT	GB	RK	HB	
0	25.07.2001	ISSUED FOR CONSTRUCTION	RSC	DMM	BDA	CM
3	16.03.2000	REISSUED FOR APPROVAL	RSC	DMM	BDA	CM
2	12.11.1999	ISSUED FOR APPROVAL	RSC	DMM	BDA	CM
1	03.11.1999	ISSUED FOR IDC	RSC	DMM	BDA	CM

Originator

conpet s.a.

ABB

PROCESS FLOW DIAGRAM
SILISTE PUMPING STATION

Area Code: D-002

Drawing Number:

Proj. No.	Orig. Code	System	Discip. Code	Dwg. Type	Seq. No.	Sheet No.
DC11	G	520	PO	XE	029	4

Orig. No.:
Proj. Seq. No.:
WBS Code:
Job No.:
Disk.:
File number: PE029004BA.DWG

This drawing and the design it covers are the property of Conpet S.A. They are merely loaned and as the borrower's express agreement that they will not be reproduced, copied, loaned, exhibited, nor used except in the limited way and private use permitted by any written consent by the lender to the borrower.